THE INFORMATION CONTAINED IN THIS DRAWING IS THE SOLE PROPERTY OF POWER LIFT ANY REPRODUCTION IN PART OR WHOLE WITHOUT THE WRITTEN PERMISSION OF POWER LIFT IS PROHIBITED

REV.	DESCRIPTION	DATE	APPROVED
A	INITIAL RELEASE	9/25/2025	TW

ITEM NO.	QTY.	PART NO.	PART NAME
1	1	60101B	WLDT, RIGHT POSITION SUPPORT
2	1	60103	FORMED, LEFT POSITION SUPPORT
3	2	60004PL	PLATED, BUSHING, .75x.12x4.09
4	2	99563	RUBBER FOOT PAD MM-7
5	2	99671	BOLT, HHCS, .5-13X5, GR5, ZINC
6	14	99571	NUT, .5-13, THIN NYLON INSERT LOCK
7	3	99649	BOLT, HHCS, .5-13X2.5, GR5, ZINC
8	2	99528	BOLT, HHCS, .375-16X3, GR5, ZINC
9	4	99531	WASHER, FLAT, .375, USS
10	2	99530	WASHER, .375, LOCK
11	4	99670	BRONZE, .75X1X.75, FLANGED, 841
12	23	99585	WASHER, FLAT, .5, SAE, ZINC
13	1	16586B	ASSY, PAD, SEAT
14	1	16585B	ASSY, BACK CUSHION
15	4	99510	BRONZE, .5X.75X.75, 841
16	2	90121	ASSY, PULL PIN , ROUND ALUMINUM KNOB, COUNTERBORE
17	1	10301	SERIAL NUMBER, UNIVERSAL
18	1	90259	DECAL, WARNING-SMALL
19	4	99954	BOLT, SFHHCS, .375-16x1.25, ZINC
20	1	60107C	WLDT, BENCH SEAT
21	1	60110E	WLDT, BENCH BACK TUBE
22	1	60114	XTRAX, ENDCAP GUARD
23	1	60115G	WLDT, BENCH BASE
24	1	60132B	WLDT, SEAT ADJUSTMENT TOP
25	1	60136C	SHAFT, .5X2.8, PIN
26	1	99520	BOLT, HHCS, .5-13X3.5, GR5, ZINC
27	5	99620	NUT, .5-13, LOCK, NYLON INSERT
28	4	99572	BOLT, HHCS, .5-13X1.5, GR5, ZINC
29	1	60006pl	PLATED, BUSHING, .75X.12X2.08
30	2	99669	BRONZE, .75X1X1, 841
31	1	60005PL	PLATED, BUSHING, .75X.12X3
32	5	99521	BOLT, HHCS, .5-13X4, GR5, ZINC
33	1	60156	XTRAX, ENDCAP GUARD
34	1	99672	BOLT, SHSS, .25 -20X.25, CUP POINT
35	1	60168B	WLDT, SEAT ADJUSTMENT TOP
36	1	60553PL	WLDT, PLATED, SEAT ADJUSTMENT BOTTOM
37	1	60150PL	PLATE, PLATED, BENCH WEAR PLATE
38	2	99455	BOLT, HHCS, .25-20X.75, GR5, ZINC
39	2	99542	NUT, .25-20, NYLON INSERT
40	4	99582	BOLT, HHCS, .5-13X1.25, GR5, ZINC
41	2	16031	PLATE, LINKAGE, BENCH
42	6	99507	BRONZE, .5X.75X.5, FLANGED, 841
43	1	99071	DECAL, MINI STACKED
44	1	12750A-PL	ASSY, PDBB BENCH STEEL LOGO KIT
45	4	99490	PLUG, BLACK PLASTIC, 7/16 HOLE
46	2	99623	BOLT, HHCS, .375-16X2.5, GR5, ZINC
47	2	99619	NUT, .375-16, LOCK, THIN, NYLON
48	2	91404	WHEEL, 3.5" THERMO CUSHION (COLSON)
49	1	89200	RUBBER FOOT PAD
50	1	60146B	PLATE, GUARD
51	1	60147B	PLATE, GUARD

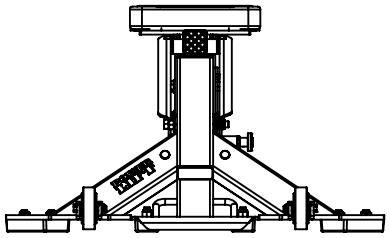

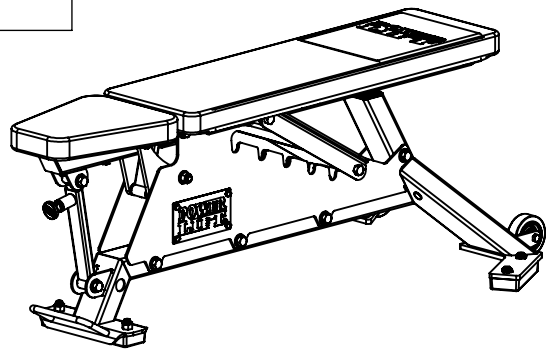

UNLESS OTHERWISE SPECIFIED
DIMENSIONS ARE IN INCHES
TOLERANCES ARE:
FRACTIONS ±1/16" DECIMALS .XX=±.02 .XXX=±.005 ANGLES ±1°

REFERENCE CODE

PRO-PDBB

POWER LIFT®

PART NUMBER **60100D**

PART NAME
ASSY, PRO MULTI ANGLE DUMBBELL BENCH

CAD GENERATED DRAWING
DO NOT MANUALLY UPDATE.

SHEET 1 OF 7 | REV. A
SCALE 1:16 | SIZE A

THE INFORMATION CONTAINED IN THIS DRAWING IS THE SOLE PROPERTY OF POWER LIFT ANY REPRODUCTION IN PART OR WHOLE WITHOUT THE WRITTEN PERMISSION OF POWER LIFT IS PROHIBITED

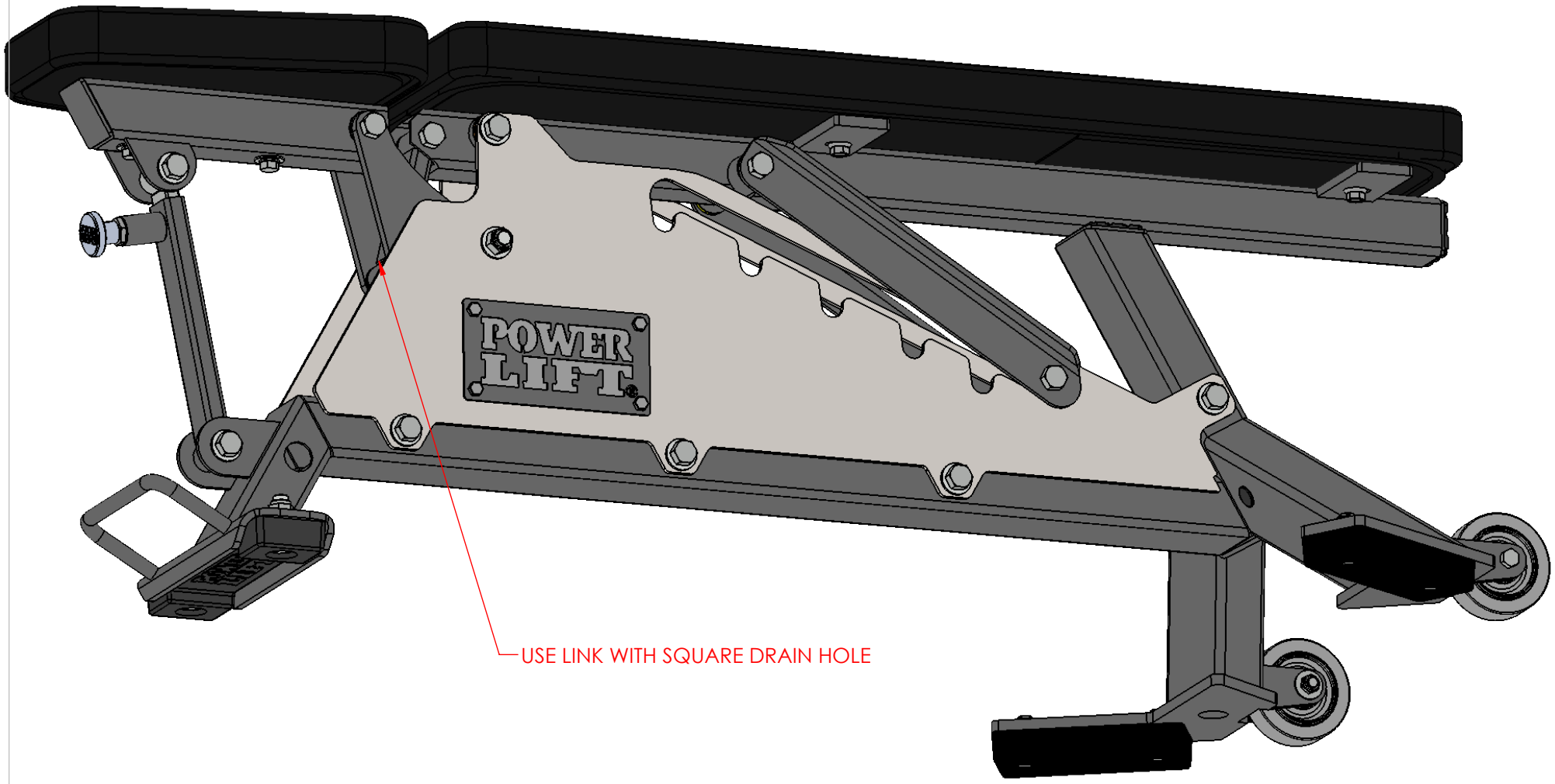

UNLESS OTHERWISE SPECIFIED
DIMENSIONS ARE IN INCHES
TOLERANCES ARE:

FRACTIONS	DECIMALS	ANGLES
±1/16"	.XX=±.02	±1°
	.XXX=±.005	

REFERENCE CODE

PRO-PDBB

POWER LIFT®

PART NUMBER **60100D**

PART NAME
ASSY, PRO MULTI ANGLE DUMBBELL BENCH

CAD GENERATED DRAWING
DO NOT MANUALLY UPDATE,

SHEET 2 OF 7 | REV. A
SCALE 1:5 | SIZE A

THE INFORMATION CONTAINED IN THIS DRAWING IS THE SOLE PROPERTY OF POWER LIFT ANY REPRODUCTION IN PART OR WHOLE WITHOUT THE WRITTEN PERMISSION OF POWER LIFT IS PROHIBITED

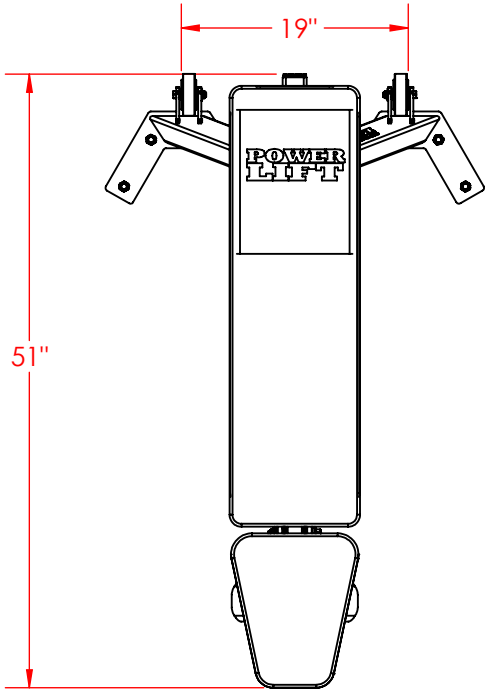

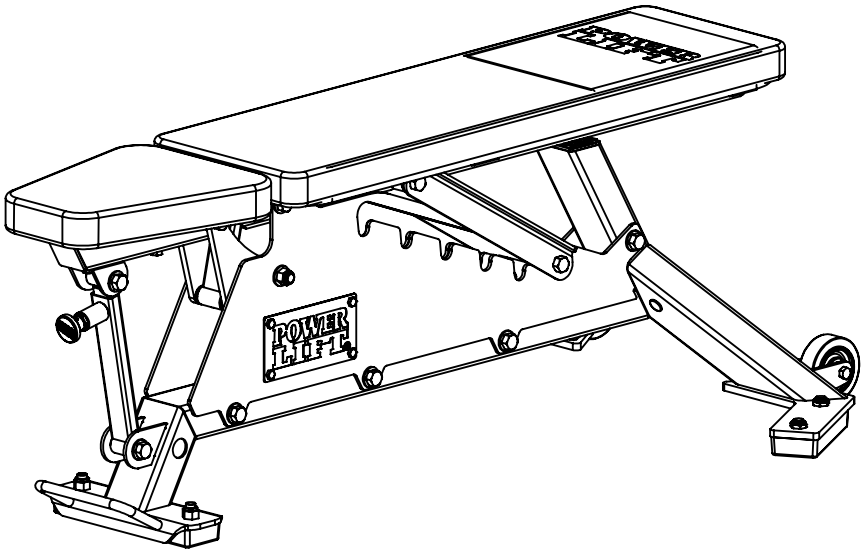

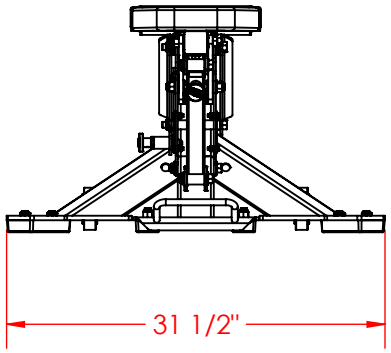

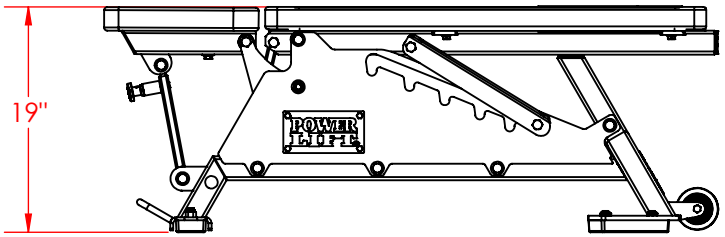

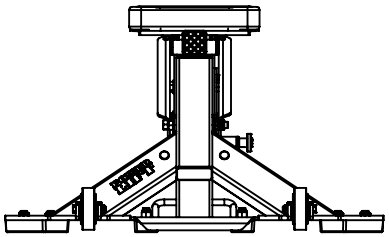

UNLESS OTHERWISE SPECIFIED
DIMENSIONS ARE IN INCHES
TOLERANCES ARE:

FRACTIONS	DECIMALS	ANGLES
±1/16"	.XX=±.02	±1°
	.XXX=±.005	

REFERENCE CODE

PRO-PDBB

POWER LIFT®

PART NUMBER **60100D**

PART NAME
ASSY, PRO MULTI ANGLE DUMBBELL BENCH

CAD GENERATED DRAWING
DO NOT MANUALLY UPDATE.

SHEET 3 OF 7 | REV. A
SCALE 1:16 | SIZE A

THE INFORMATION CONTAINED IN THIS DRAWING IS THE SOLE PROPERTY OF POWER LIFT ANY REPRODUCTION IN PART OR WHOLE WITHOUT THE WRITTEN PERMISSION OF POWER LIFT IS PROHIBITED

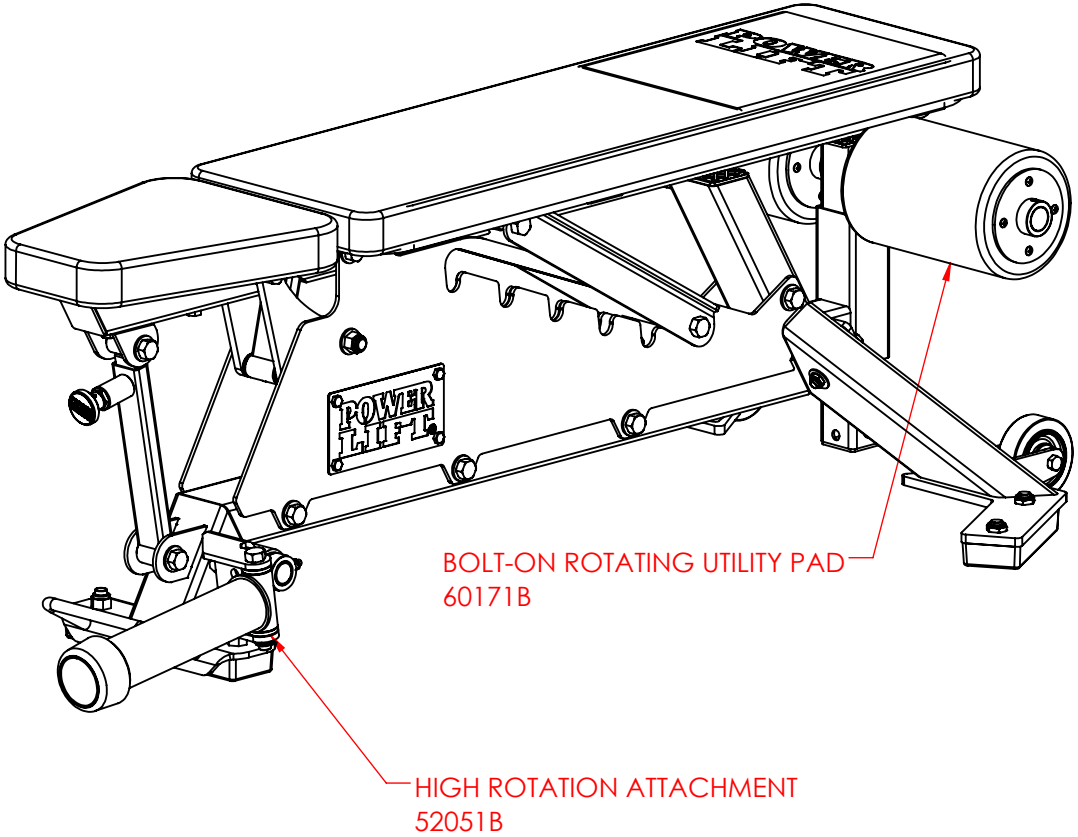

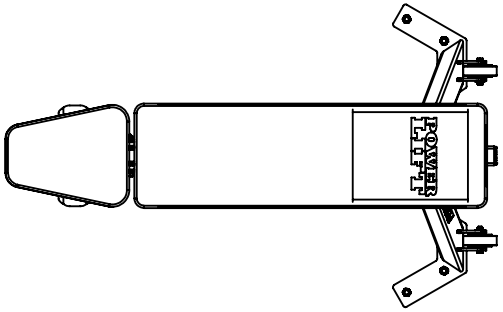

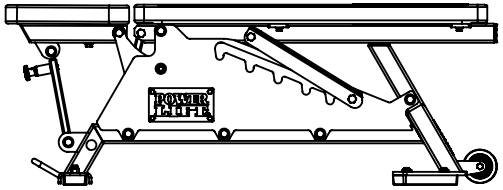

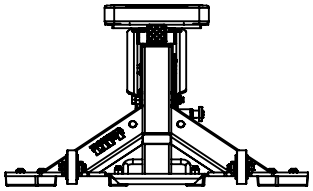

UNLESS OTHERWISE SPECIFIED
DIMENSIONS ARE IN INCHES
TOLERANCES ARE:

FRACTIONS	DECIMALS	ANGLES
±1/16"	.XX=±.02	±1°
	.XXX=±.005	

REFERENCE CODE

PRO-PDBB

POWER LIFT®

PART NUMBER **60100D**

PART NAME
ASSY, PRO MULTI ANGLE DUMBBELL BENCH

CAD GENERATED DRAWING
DO NOT MANUALLY UPDATE,

SHEET 4 OF 7 | REV. A
SCALE 1:8 | SIZE A

THE INFORMATION CONTAINED IN THIS DRAWING IS THE SOLE PROPERTY OF POWER LIFT ANY REPRODUCTION IN PART OR WHOLE WITHOUT THE WRITTEN PERMISSION OF POWER LIFT IS PROHIBITED

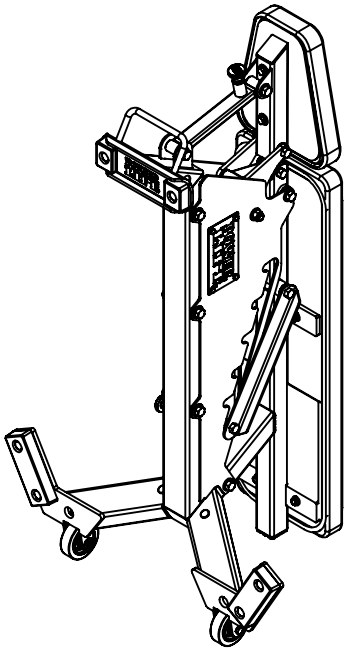

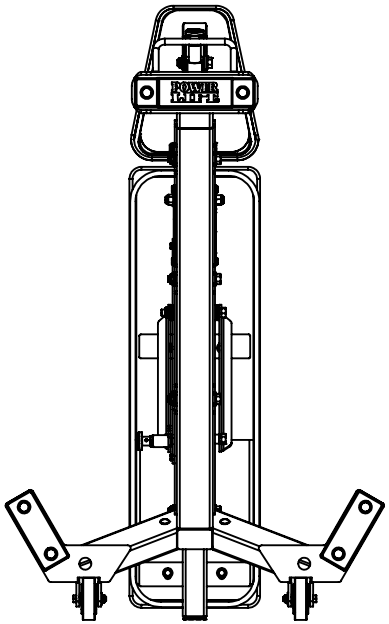

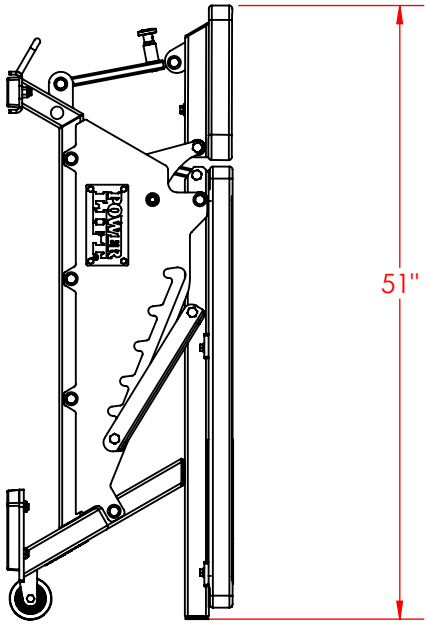

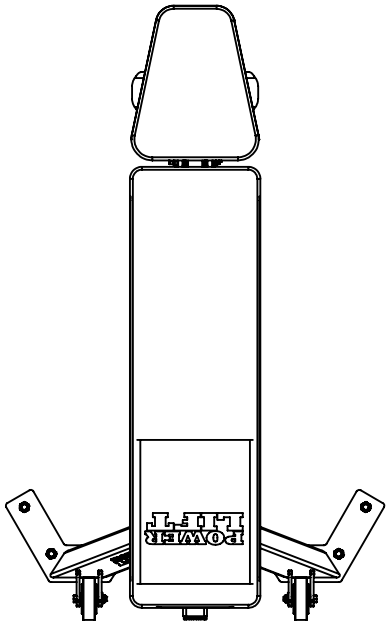

UNLESS OTHERWISE SPECIFIED
DIMENSIONS ARE IN INCHES
TOLERANCES ARE:

FRACTIONS	DECIMALS	ANGLES
±1/16"	.XX=±.02	±1°
	.XXX=±.005	

REFERENCE CODE

PRO-PDBB

POWER LIFT®

PART NUMBER **60100D**

PART NAME
ASSY, PRO MULTI ANGLE DUMBBELL BENCH

CAD GENERATED DRAWING
DO NOT MANUALLY UPDATE.

SHEET 5 OF 7	REV.	A
SCALE 1:16	SIZE	A

THE INFORMATION CONTAINED IN THIS DRAWING IS THE SOLE PROPERTY OF POWER LIFT ANY REPRODUCTION IN PART OR WHOLE WITHOUT THE WRITTEN PERMISSION OF POWER LIFT IS PROHIBITED

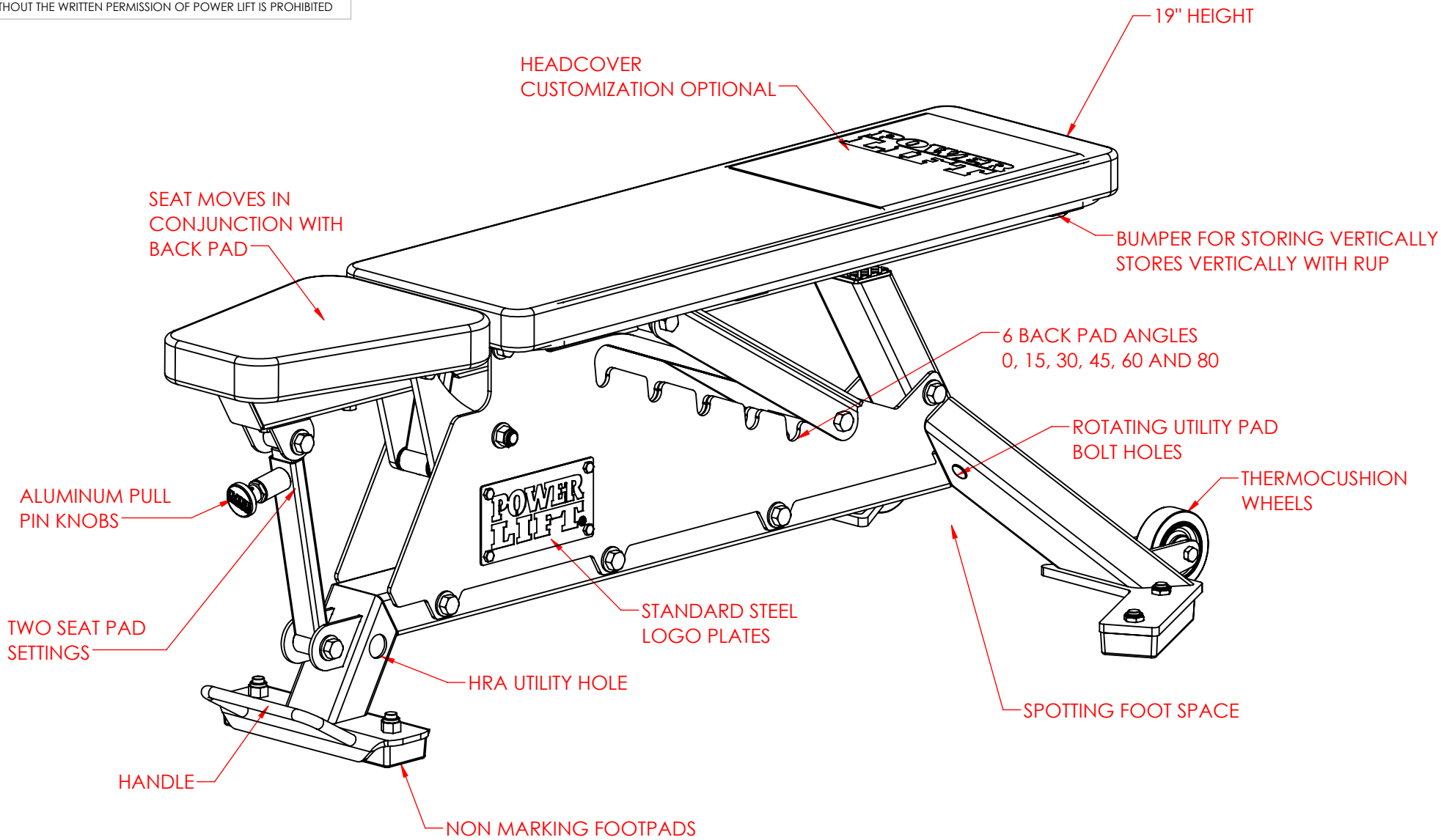

UNLESS OTHERWISE SPECIFIED
DIMENSIONS ARE IN INCHES
TOLERANCES ARE:

FRACTIONS	DECIMALS	ANGLES
±1/16"	.XX=±.02	±1°
	.XXX=±.005	

REFERENCE CODE

PRO-PDBB

POWER LIFT®

PART NUMBER **60100D**

PART NAME
ASSY, PRO MULTI ANGLE DUMBBELL BENCH

CAD GENERATED DRAWING
DO NOT MANUALLY UPDATE.

SHEET 6 OF 7 | REV. A
SCALE 1:6 | SIZE A

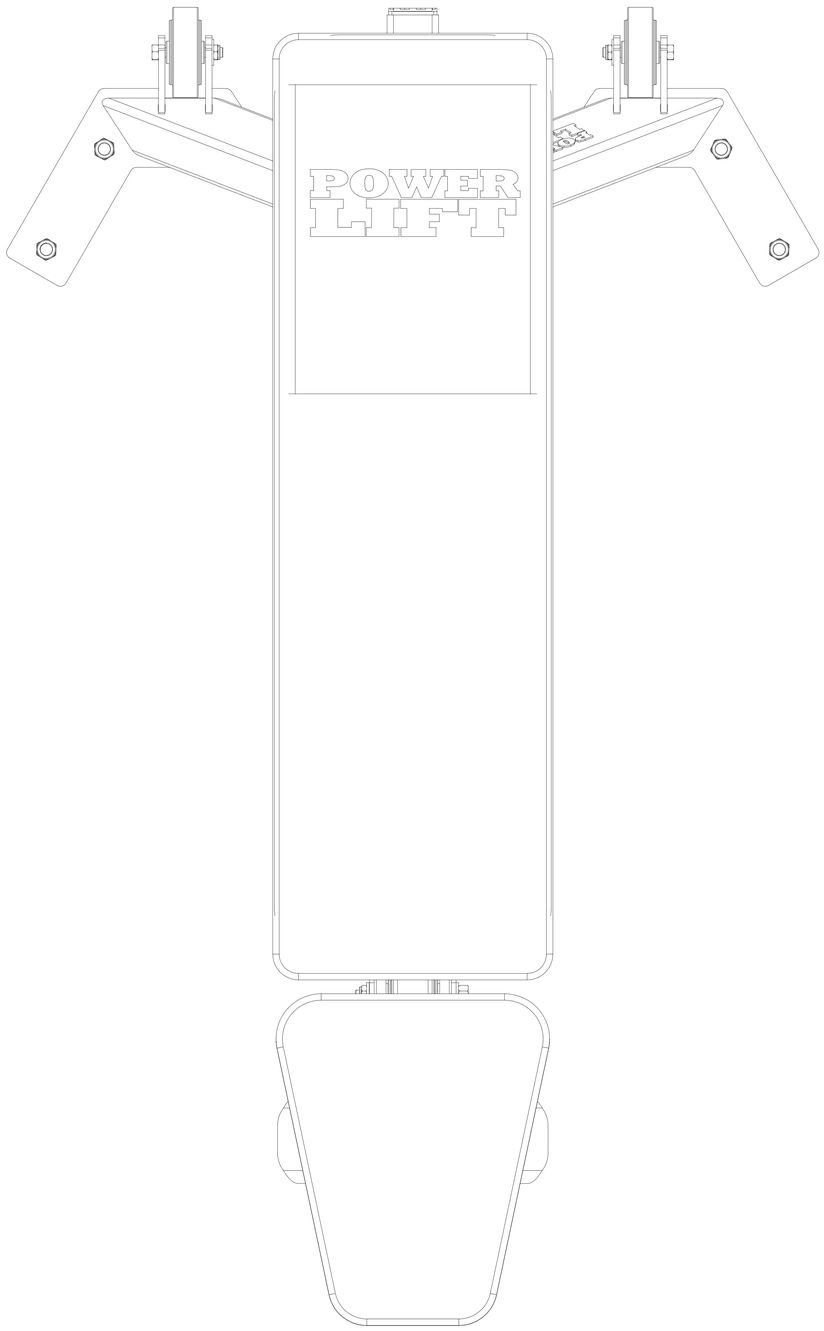
POWER
LIFT